螺杆压缩机的极致水平

Summit of screw air compressor technology

高端螺杆压缩机制造企业

Manufacturing enterprise of high-end screw air compressor

辛麦恩 Km. ssor

40巴无油、微油螺杆空气压缩机

40bar oil free and micro oil screw air compressor

辛麦恩压缩机

CMN COMPRESSOR

辛麦恩 Km. ssor

咨询热线：400-119-7888

E-mail:sales@cmngroup.cn

http://www.zjjn.net

辛麦恩发展史 History of CMN development

高端螺杆压缩机制造企业
Manufacturing enterprise of high-end screw air compressor

辛麦恩Km. ssor

- 1960年法国辛麦恩（B.Zimmern)提出了单螺杆构想，并获得专利权。
  1960，B.Zimmern conceived single screw technology and obtained the patent right.
- 1962年试制出第一台样机。
  1962,the first prototype was tested.
- 1963年法国标致汽车公司购买辛麦恩专利，并正式生产投放市场。
  1963,Automobiles Peugeot purchased B.Zimmern’s patent and went into production.
- 1970年授权日本三井工业、大金空调、美国麦克维尔等企业大批量生产，因其运行平稳、受力平衡、可靠性好等优点。
  单螺杆在空气压缩与制冷工业得到迅速发展，美国海军最早将单螺杆压缩机应用于军队。
  1970,Corporations such as Mitsui,Daikin,McQuay was authorized B.Zimmern’s technology to mass production.Single screw technology rapidly was rapidly in air compression and refrigerating industry with the advantages of stable operation,balanced force and high reliability.American Navy first adopted the single screw compressor to military army.
- 2001年进入中国与浙江杰能压缩设备技术合作，在中国建立生产基地并开始生产。
  2001,technical cooperation with Zhejiang Jieneng Compression Equipment in China,and the production base was established.
- 2004年推出喷油单螺杆空压机系列产品。
  2004,micro oil single screw air compressor series was put on the market.
- 2005年推出水润滑无油空气压缩机。
  2005,water injected type oil free screw air compressor was put on the market.
- 2008年研发推出二级压缩40巴微油螺杆空气压缩机。
  2008,two stage compression 40 bar micro oil screw air compressor was put on the market.
- 2014年研发推出二级压缩40巴无油螺杆空气压缩机
  2014,two stage compression 40 bar oil free screw air compressor was put on the market.

40巴无油螺杆空气压缩机特点
40 bar oil free screw air compressor features

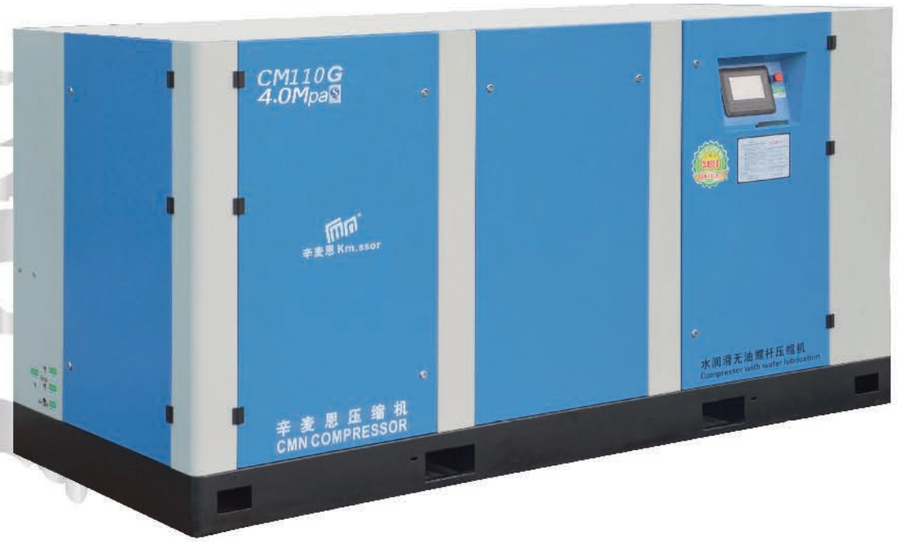

- 节能30%以上、无振动、低噪音。
  Energy saving more than 30% without any vibration,lower noise.
- 无易损件、维护修理周期五年以上。
  No wearing parts,maintenance period more than 5 years.
- 年耗材费用不超过二万元。
  Consumable parts for each year does not exceed 3000USD.
- 环保、不使用任何润滑油。
  Environment protection without any lubricate oil.

www.zjjn.net

通过德国TÜV检测机构0级无油认证、含油量0

Class 0 oil free certified by Germany TUV examination organization,oil content 0.

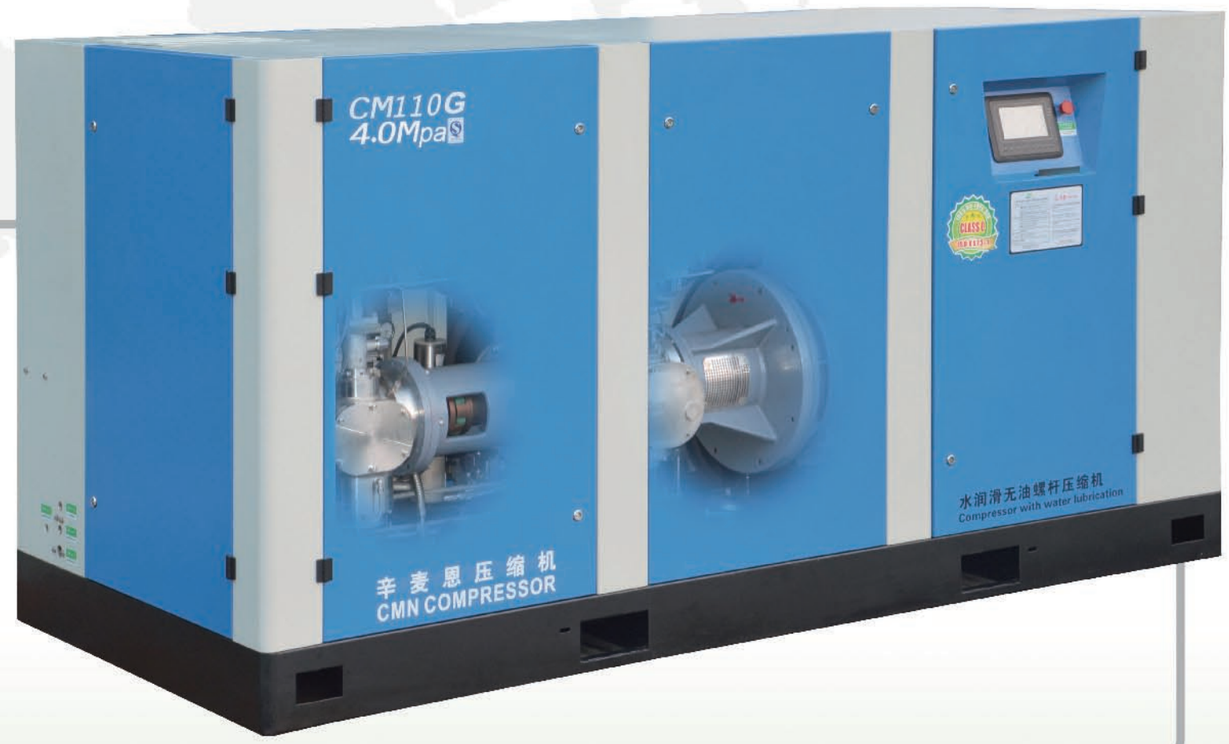

专利进气阀结构
Patented air intake valve structure

不锈钢水冷却器
Stainless steel water cooler

磁力泵
Magnetic punp

水气分离器与水过滤器
Water/gas separator and water filter

控制面板
Control panel

可用于呼吸的纯净空气
Purified air used for breathing

- 节能：比活塞无油机节能30%以上
  Energy-saving:more than 30% compared with piston oil free compressor
- 环保：不使用任何润滑油，避免环境污染
  Environment protection : nonuse of lubricate oil to avoid the environment pollution
- 可靠：绝对无油的保障
  Reliability : absolutely guarantee oil free

- 100%无油压缩空气
  100% oil-free compressed air
- 100%纯净的压缩空气
  100% purified compressed air
- 100%没有油污染风险的压缩系统
  100% oil pollution risk-free compressed system

更多资讯，请登入 www.zjjn.net

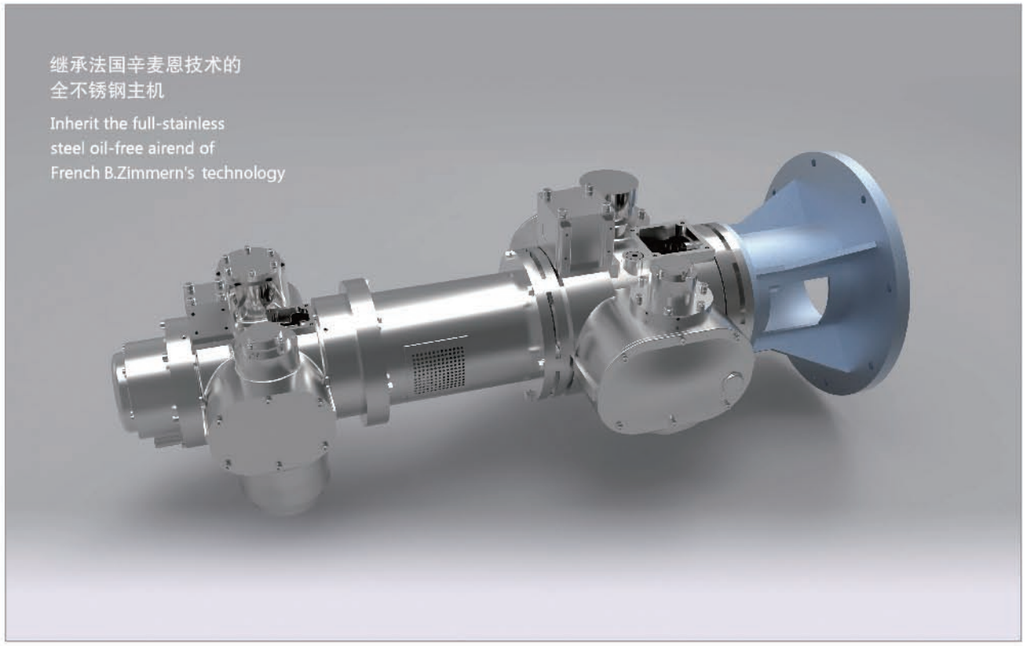

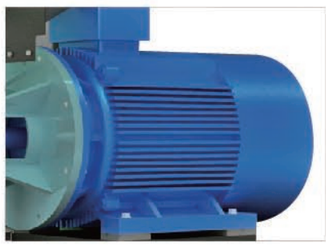

优质名牌电机，防护等级IP54，绝缘等级F级，脂润滑，SKF轴承，高效率，也可根据用户要求特殊设计

With the high-quality motor of well-known brand,IP code of IP 54,Level F of insulation level,grease lubrication,SKF bearing,high efficiency,the special design of the machine can be conducted according to the requirements of the users

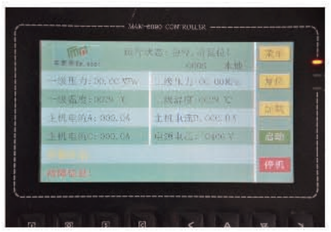

先进的控制和监控系统显示整个机组的所有运行信息兼带RS485接口可实现远程控制

The advanced controlling and monitoring system can display all operation situation of the whole unit, together with RS485 interface fulfilling remote control

唯一易耗件
Consumable parts

空气滤芯
Air filter element

空气过滤芯的作用是挡住吸入空气中的部分颗粒状杂质；根据环境状况不同500–2000小时更换一次。

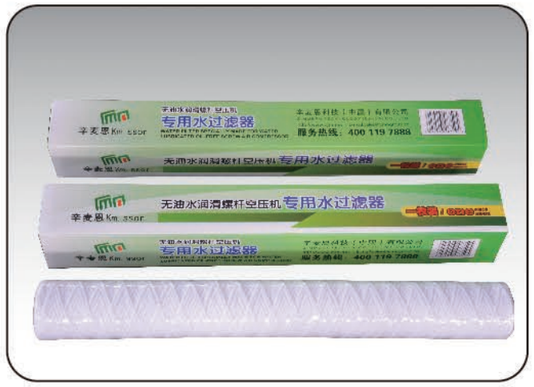

水过滤器芯
Water filter element

水过滤器芯的作用是挡住循环水中的颗粒性杂质，保护主机不磨损，根据环境状况不同2000–4000小时更换一次。

The function of air filter element is to block the sucked impurities in air.Based on environmental condition,replacement of the air filter element for each 500~2000hours.

The function of water filter element is to block the impurities in the circulating water and protect the air end.Based on environmental condition,replacement of the water filter element for each 2000~4000 hours.

系统安装示意图
System installation diagram

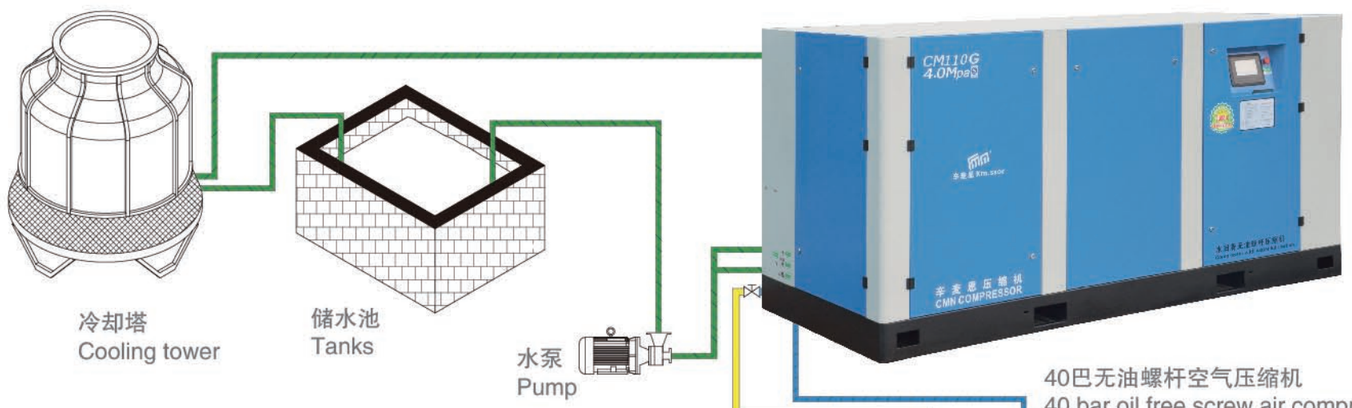

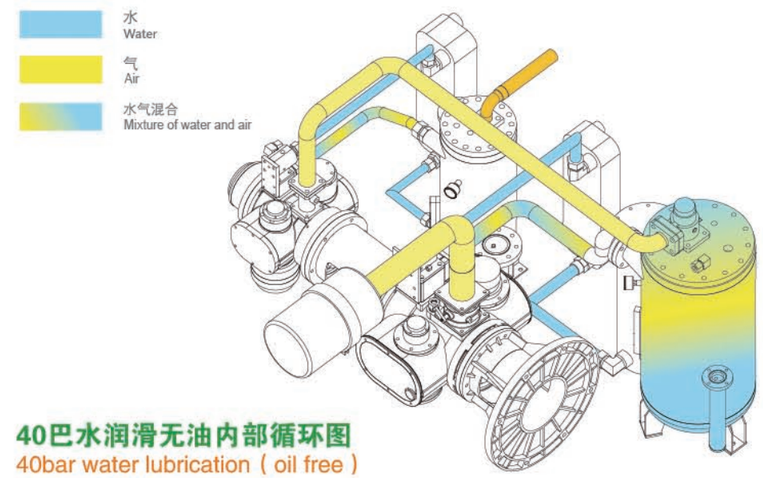

40巴水润滑无油内部循环图
40bar water lubrication（oil free）
internal circulation diagram

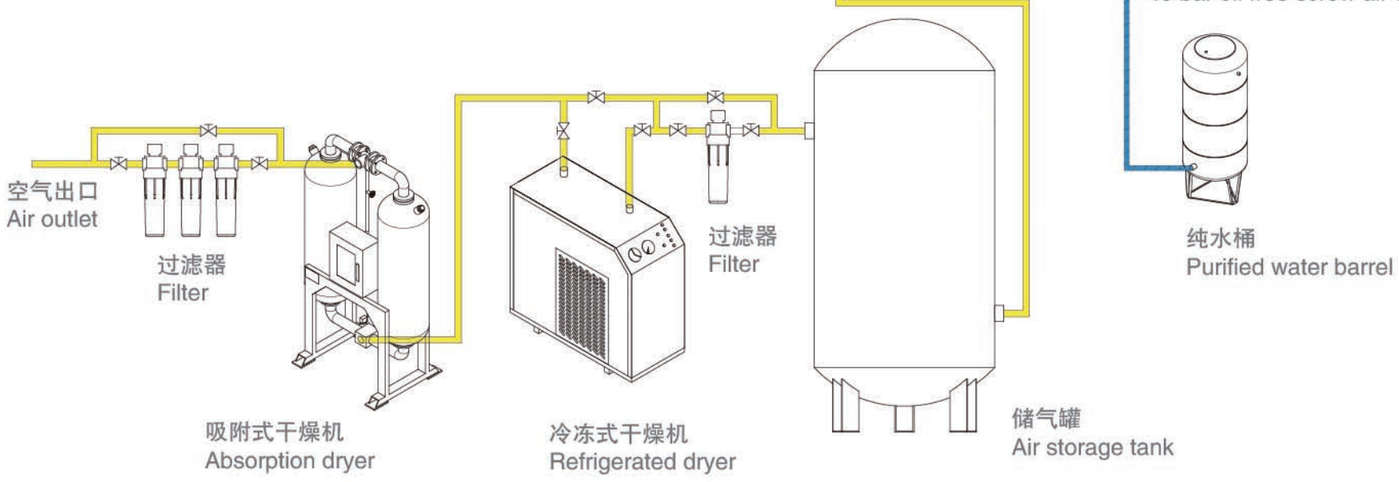

冷却水管路
Cooling water pipe

纯水管路
Purified water pipe

空气管路
Air pipe

杰出之特点
Extraordinary features

- 高效节能。
  High efficiency and Energy saving.

- 相比活塞式压缩机，在都是新机器状态下节能15%-20%，在活塞环及缸体等零件磨损状态下相差30%-40%，运行两年节省的电费相当于购机成本。
  For new machine,energy saving 15%-20% compared with piston air compressor.After the wear of piston ring and cylinder body,energy saving 30%-40% compared with piston air compressor.The saved electric charges for 2 years operation equals to the machine's purchase cost.

- 箱式设计、无振动、低噪音、体积少。
  box type design,no vibration,low noise,small.

- 箱式全封闭设计，主轴每转一周压缩十二次，相当于十二缸发动机，主机无振动，噪音低至78分贝，特别设计可低于70分贝，占地面积只有常规机器的1/2，重量只有常规机器的1/3。
  Box type fully enclosed design,one revolution of the main shaft compresses 12 times,equal to 12-cylinder engine.No vibration of the air end,noise as low as 78dB,special design can reach 70dB,half area occupied and one third weight compared with conventional machine.

- 无易损件、维护修理周期5年（50000小时）以上。
  No wearing parts,maintenance period more than 5 years (50000hours).

- 整机结构简单，没有易损件，50000小时气量下降不超过5%，维护及修理周期五年（50000小时）以上。
  Fine structure,no wearing parts,the decrease of air production after 50000-hour working can be in 5%,maintenance period more than 5 years (50000 hours).

- 耗材少，费用低。
  Fewer consumable parts,less expenses

- 机器耗材只有空气滤芯与水过滤芯，费用省。
  Air filter element and water filter element only,less expenses.

- 环保、纯无油设计，通过ISO8573-1无油认证。
  Environment,oil free design,8573-1 oil free certification.

- 设备不使用任何润滑油，避免环境污染与排放,不锈钢缸体压缩的空气经过纯净水洗涤，压缩空气如雨后般的清新。
  Without any lubricate oil to avoid environment pollution and the compressed air is purified by the water in the stainless steel chamber.

- 等温压缩、效率高、排气温度低，压缩空气含水率低。
  Isothermal compression,low exhaust temperature,low water ratio in compressed air.

- 主机最高压缩腔温度不超过50℃，整个机组在常温下工作，无需冷却的压缩空气温度不超过45℃，含水率极低，所有机组零件都在常温下工作，延长了机件使用寿命，提高了可靠性，故障率低。
  Compressing chamber temperature of the air end is no higher than 50℃.Working under normal temperature,the compressed air does not exceed 45℃,low water ratio.All parts works under normal temperature,which prolongs the service life,enhances reliability and makes sure the low failure rate.

- 管理、使用十分简便。
  Simple management and maintenance.

- 辛麦恩高科技高品质压缩机使用管理十分简便，并可通过485接口连入您的DCS系统，机器运行情况随时掌握。
  CMN high-tech air compressor with high quality handles very easy,which can be connected with your DCS system by 485 interface.The working condition of the air compressor can be in control at all time.

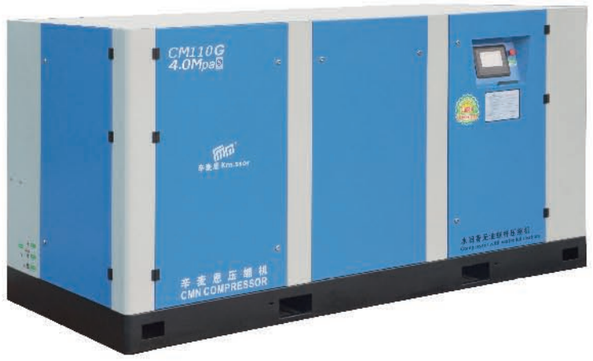

CM/G中压无油螺杆空气压缩机技术参数
Technical parameters for CM/G series medium pressure oil free screw air compressor

型号 Model	工作压力 work pressure	流量 FAD	功率 Power	噪音 Noise	重量 Weight	冷却水量 Cooling fan power	压缩空气出口管径 Compressed Air Outlet Diameter	外形尺寸 Dimension L×W×H
	Mpa	M³ / min	kW	dB(A)	kg	T/h		mm
CM110G	3.0-4.0	10.2	110	76	2630	24	DN32	3000×1350×1540
CM250G	3.0-4.0	24.5	250	78	5200	50	DN65	3600×1500×1650

更多资讯·请登入 www.zjjn.net

www.zjjn.net

40巴微油螺杆空气压缩机
40bar micro oil screw air compressor

辛麦恩的研发团队在全球范围内首先推出二级压缩单螺杆式压缩机；在工业生产与军事、国防设施中有许多要用到1.6–4.0MPa的中压压缩空气；目前在国内甚至国际上大多采用活塞式空压机；而活塞式空压机振动大，噪音高，泄漏量大，所以效率很低，相同功率的产气量很小；辛麦恩二级压缩单螺杆压缩机的开发将填补国内、国际空白，辛麦恩公司也将为全球的中压压缩机作一份贡献。

CMN research and development team has firstly launched the two stage single screw air compressor worldwide. The 1.6–4.0Mpa medium pressure compressed air is used in the industrial production and military defense facilities. At present, piston air compressor is widely used at home and abroad which is with the disadvantages of much vibration and noise, high leakage, low efficiency and less air production in the same power. Obviously, the research and development of CMN two stage single screw air compressor will do a contribution to the global medium pressure air compressor industry.

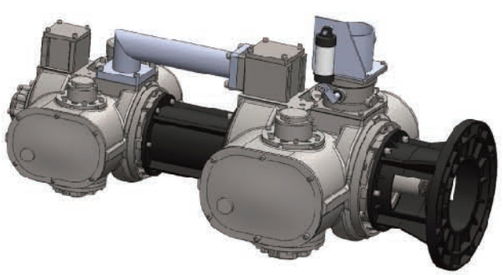

全球首创高压二级压缩螺杆主机
World first high pressure two stage screw air compressor air end

触摸屏控制操作系统
Touch Screen Control operation system

CMN/G中压微油螺杆空气压缩机技术参数
Technical parameters for CMN/G series medium pressure micro oil screw air compressor

辛麦恩Km. ssor

型号 Model	工作压力 work pressure	流量 FAD	供气温度 Air supply temperature	功率 Power	噪音 Noise	供气含油量 Oil content (supply air)	冷却风扇功率 Cooling fan power	压缩空气出口管径 Compressed Air Outlet Diameter	重量 Weight	外形尺寸 Dimension L×W×H
	Mpa	M³ / min	℃	kW	dB(A)	PPM	kW	inch	kg	mm
CMN18G	2.0 ~ 3.0	1.73	≤环境温度+25℃ ≤ambient temperature +25℃	18.5	65	≤2	0.7	3/4 "	868	1650x1150x1310
CMN22G	2.0 ~ 3.0	2.10		22	65		0.7	3/4 "	900	1650x1150x1310
CMN37G	2.0 ~ 3.0	3.30		37	67		2.0	3/4 "	1232	1900x1420x1480
CMN55G	2.0 ~ 3.0	6.20		55	70		2.0	1 1/4 "	2000	2280x1500x1990
CMN185G	2.0 ~ 3.0	19.60		185	78		8.0	2 1/2 "	6520	3200x1850x2190
CMN220G	2.0 ~ 3.0	24.60		220	78		11.0	3 "	6560	3500x1900x2250

型号 Model	工作压力 work pressure	流量 FAD	供气温度 Air supply temperature	功率 Power	噪音 Noise	供气含油量 Oil content (supply air)	冷却风扇功率 Cooling fan power	压缩空气出口管径 Compressed Air Outlet Diameter	重量 Weight	外形尺寸 Dimension L×W×H
	Mpa	M³ / min	℃	kW	dB(A)	PPM	kW	inch	kg	mm
CMN22G	3.0 ~ 4.0	1.60	≤环境温度+25℃ ≤ambient temperature +25℃	22	65	≤2	0.7	3/4 "	900	1650x1150x1310
CMN37G	3.0 ~ 4.0	3.00		37	67		2.0	3/4 "	1232	1900x1420x1480
CMN55G	3.0 ~ 4.0	5.70		55	70		2.0	1 1/4 "	2000	2280x1500x1990
CMN220G	3.0 ~ 4.0	19.70		220	78		11.0	3 "	6560	3500x1900x2250
CMN250G	3.0 ~ 4.0	23.80		250	78		11.0	3 "	7200	3500x1900x2250

更高压力和其他特殊解决方案，请咨询400 119 7888
Other special requirement for higher pressure,please contact 400 119 7888

更多资讯，请登入 www.zjjn.net

www.zjjn.net

部分合作客户
CMN successful cases

JIENNEN ZHEJIANG

辛麦恩中压机应用行业
Application of CMN medium pressure air compressor

辛麦恩Km. ssor

辛麦恩中压机有宽广的工作范围，提供从压缩空气到各种工业气体的解决方案。

CMN medium pressure air compressor has wide application,which provides solution for the compression of air to various kinds of industrial gases.

PET吹瓶
PET bottle blowing

医疗行业
Medical industry

工业气体
(氮气、二氧化碳)
Industrial gases
(N_2,CO_2)

沼气回收
Marsh gas collection

航空航天工业
Aerospace industry

船舶行业
Shipping industry

汽油气回收
Gasoline gas collection

石油化工
Petrochemicals

食品行业
Food industry

医疗行业
Pharmaceuticals industry

更多资讯，请登入 www.zjjn.net

www.zjjn.net